VN	VIETNAM

Diagram / Parts List

M0601

10MM DRILL

2021/08

(VN) M0601 / 10MM DRILL

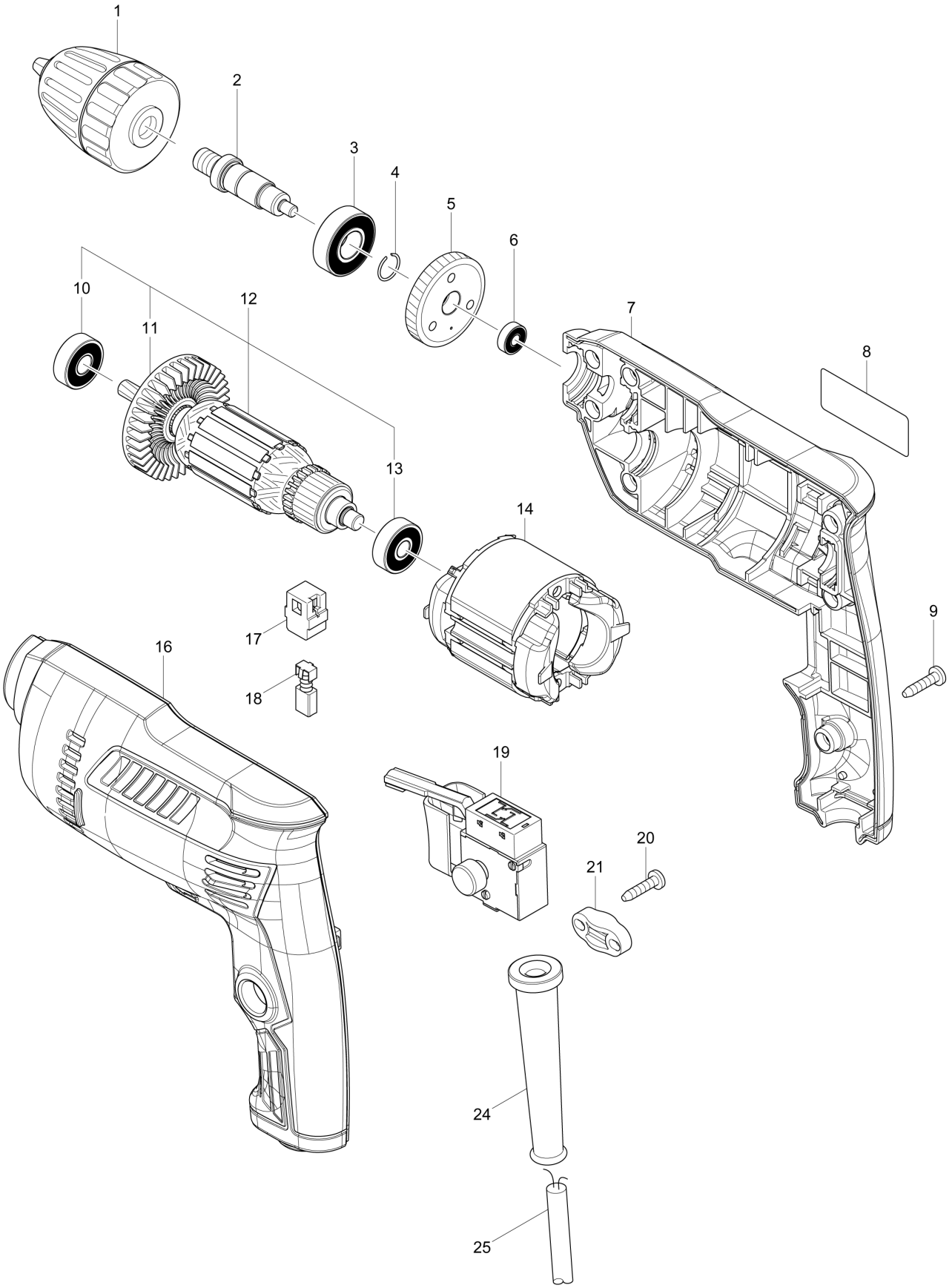

VN	VIETNAM

M0601 / 10MM DRILL

Item	Sub	Parts No.	Parts Description	Qty	I/C	E/C No.	Close No.	Remark
001		766026-9	KEYLESS DRILL CHUCK 10	1				
002		326025-9	SPINDLE	1				
003		210119-9	BALL BEARING 6001ZZ	1				
004		233950-6	RING SPRING 11	1				
005		227742-3	HELICAL GEAR 35	1				
006		210137-7	BALL BEARING 606ZZ	1				
007		183B23-6	HOUSING SET	1				
	D10		INC. 16					
008		853B83-9	M0601 NAME PLATE	1			D6632	
008-1		853B83-9	M0601 NAME PLATE	1	O	D6632		
009		265652-6	TAPPING SCREW 4X18	7				
010		210046-0	BALL BEARING 608ZZ	1				
011		240127-6	FAN 52	1				
012		515833-5	ARMATURE ASS'Y 220V	1				
	D10		INC. 10,11,13					
013		210050-9	BALL BEARING 627ZZ	1				
014		633988-5	FIELD	1				
016		183B23-6	HOUSING SET	1				
	D10		INC. 7					
017		643566-3	BRUSH HOLDER 5X8	2				
018		191627-8	CARBON BRUSH CB-64	1				
019		650240-6	SWITCH FA2-4/1BEK	1				
020		265652-6	TAPPING SCREW 4X18	2				
021		687124-5	STRAIN RELIEF	1				
024		682583-8	CORD GUARD	1				
025		691284-7	POWER SUPPLY CORD 0.75-2-2.0	1				
E01		645190-8	NOISE SUPPRESSOR	1				
E02		646147-2	CHOKE COIL	1				
E03		646153-7	CHOKE COIL	1				

Interchange
O : Yes
X : No
< : the new part can be substituted for the current.
> : the current part can be substituted for the new.
S : Interchangeable as a set.