VN	VIETNAM

Diagram / Parts List

HP488D

CORDLESS HAMMER DRIVER DRILL

2021/09

(VN) HP488D / CORDLESS HAMMER DRIVER DRILL

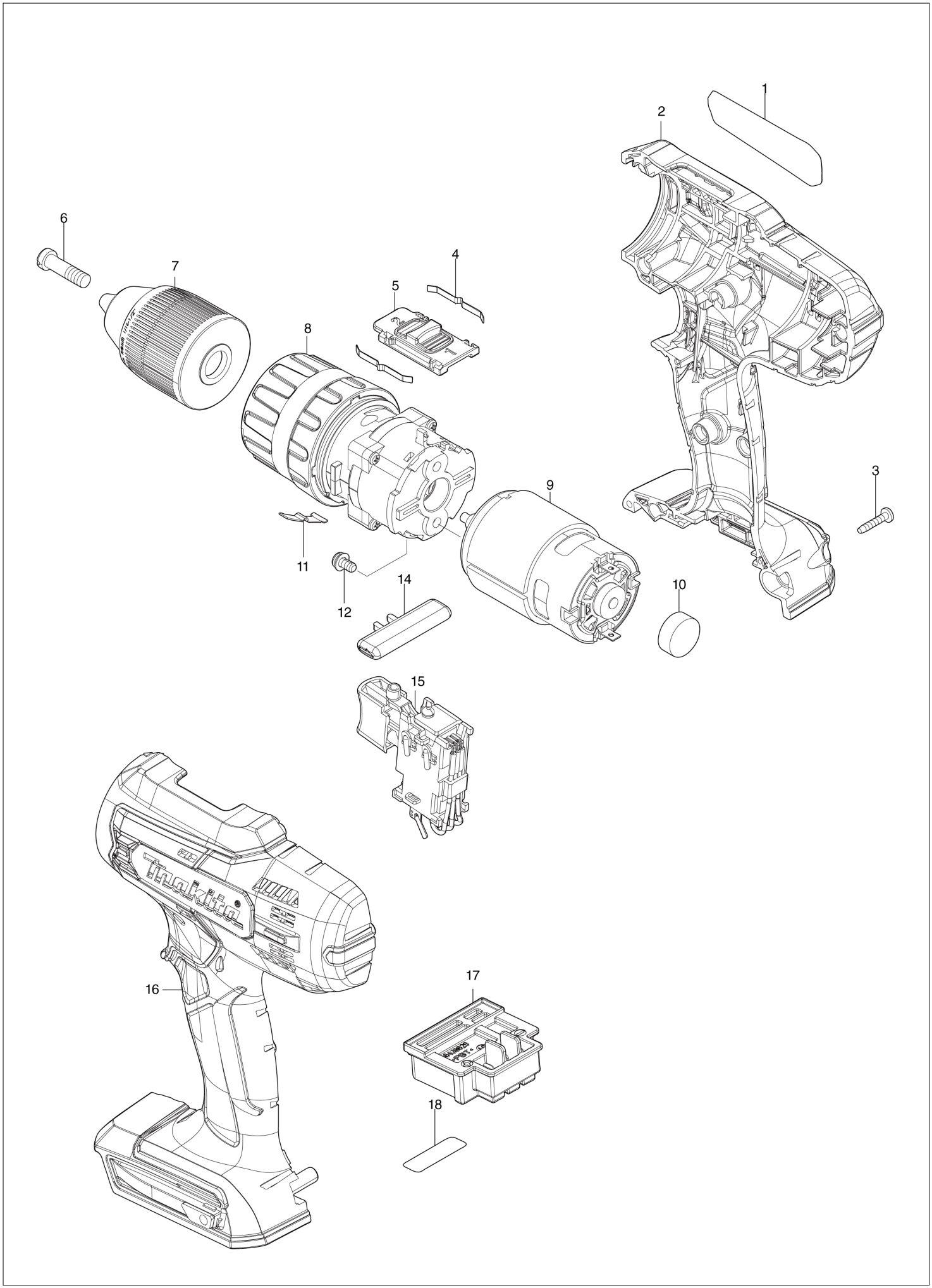

VN	VIETNAM

HP488D / CORDLESS HAMMER DRIVER DRILL

Item	Sub	Parts No.	Parts Description	Qty	I/C	E/C No.	Close No.	Remark
001		858A41-4	HP488D NAME PLATE	1				
002		183R93-1	HOUSING SET	1				
	C10	252126-6	HEX. LOCK NUT M4-7	2				
	D10		INC. 16					
003		266429-2	TAPPING SCREW 3X16	9				
004		232220-0	LEAF SPRING	2				
005		127754-5	SPEED CHANGE LEVER ASSEMBLY	1				
	C10	233438-6	COMPRESSION SPRING 4	2				
006		251468-5	- FLAT HEAD SCREW M6X22	1				
007		766004-9	KEYLESS DRILL CHUCK 13	1			DB895	
007-1		763260-2	KEYLESS DRILL CHUCK 13	1	O	DB895		
008		127732-5	GEAR ASSEMBLY	1				
009		629937-8	DC MOTOR	1				
010		421940-3	CAP	1				
011		232182-2	LEAF SPRING	1				
012		911108-4	PAN HEAD SCREW M4X8	2				
014		452399-3	F/R CHANGE LEVER	1				
015		638887-6	SWITCH UNIT	1				
016		183R93-1	HOUSING SET	1				
	C10	252126-6	HEX. LOCK NUT M4-7	2				
	D10		INC. 2					
017		643862-9	TERMINAL	1				
018		858A45-6	HP488D SERIAL NO. LABEL	1				
A01A		784637-8	+- BIT 2-45	1				
A01B		784637-8	+- BIT 2-45	1				
A01C		784637-8	+- BIT 2-45	1				
A01E		784637-8	+- BIT 2-45	1				
	D10		COMPO-PARTS					
A02B		***DC18WA	DC18WA BATTRY CHARGER	1				
	D10		COMPO-PARTS					
A02C		***DC18WA	DC18WA BATTRY CHARGER	1				
	D10		COMPO-PARTS					
A02D		***DC18WA	DC18WA BATTRY CHARGER	1				
	D10		COMPO-PARTS					
A02E		***DC18WB	DC18WB BATTRY CHARGER	1				
A03B		198186-3	BATTERY BL1815G SET	2				
A03C		191N69-0	BATTERY BL1820G SET	2		Z49347		
A03D		198186-3	BATTERY BL1815G SET	2				
A03E		198186-3	BATTERY BL1815G SET	2				
A04B		452652-7	BATTERY COVER	1				
A04C		452652-7	BATTERY COVER	1				
A04D		452652-7	BATTERY COVER	1				
A04E		452652-7	BATTERY COVER	1				
A05B		821844-3	PLASTIC CARRYING CASE	1				
	C10	455522-9	SLIDE LATCH	2				
A05C		821844-3	PLASTIC CARRYING CASE	1				
	C10	455522-9	SLIDE LATCH	2				
A05D		821632-8	PLASTIC CASE	1				
	C10	455522-9	SLIDE LATCH	2				
A05E		821844-3	PLASTIC CARRYING CASE	1				
	C10	455522-9	SLIDE LATCH	2				
A06B		8027B7-6	HP488DWE PLASTIC CASE LABEL	2				
A06C		8028Y3-1	HP488DWAE PLASTIC CASE LABEL	2				
A06E		8044G4-5	HP488D002 PLASTIC CASE LABEL	2				
A07D		D-52308	74PCS. BIT SET, MM, TYPE NZ	1				
E01		163400-6	HANDSTRAP	1				

A:HP488DZ(N)
B:HP488DWE(H)
C:HP488DWAE(H)
D:HP488DYEX1(H)
E:HP488D002(H)

Interchange
O : Yes
X : No
< : the new part can be substituted for the current.
> : the current part can be substituted for the new.
S : Interchangeable as a set.