VN	VIETNAM

Diagram / Parts List

HG6030

HEAT GUN

2021/01

(VN) HG6030 / HEAT GUN

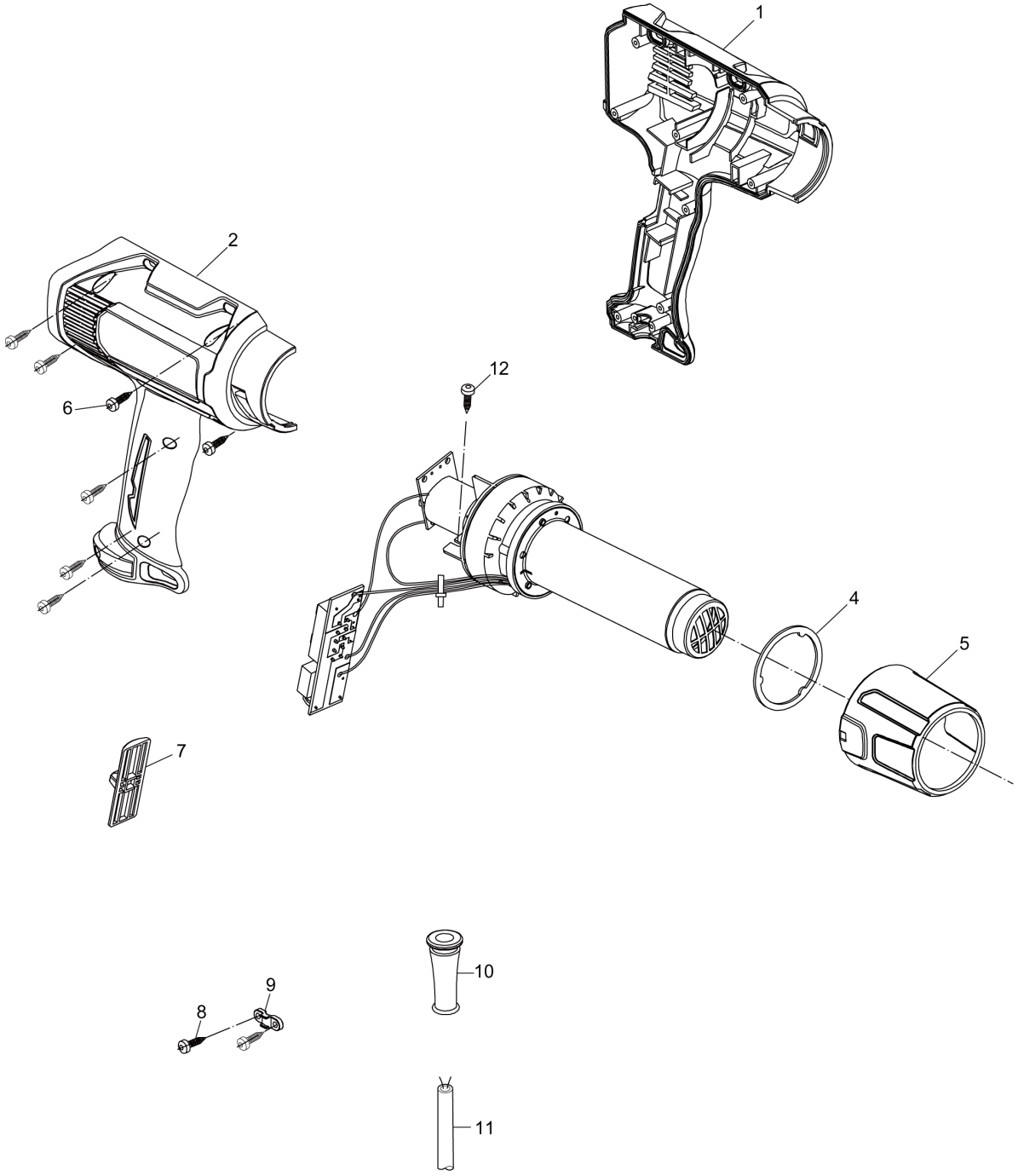

VN	VIETNAM

HG6030 / HEAT GUN

Item	Sub	Parts No.	Parts Description	Qty	I/C	E/C No.	Close No.	Remark
001		PR00000001	HOUSING LEFT	1				
002		PR00000003	HOUSING RIGHT	1				
004		PR00000011	SUPPORT RING	1				
005		PR00000010	FRONT COVER COMPLETE	1				
006		PR00000004	TAPPING SCREW	7				
007		PR00000026	SWITCH COVER	1				
008		PR00000007	TAPPING SCREW	2				
009		PR00000006	CORD CLAMP	1				
010		PR00000008	CORD GUARD	1				
011		PR00000044	POWER SUPPLY CORD	1				
012		PR00000007	TAPPING SCREW	1				
013		PR00000025	HEATER MOTOR SWITCH ASSY	1		Y07900		
A01		PR00000028	GLASS PROTECTION NOZZLE	1			Y07787	
A02		PR00000029	WIDE-SLOT NOZZLE	1			Y07787	
A03		PR00000030	REFLECTOR NOZZLE	1			Y07787	
A04		PR00000031	REDUCTION NOZZLE 20mm	1			Y07787	
A05		PR00000032	OVERLAP WELDING NOZZLE	1			Y07787	
A06		PR00000033	SOLDER SLEEVES REFLECTOR	1			Y07787	
A07		PR00000034	WELDING NOZZLE	1			Y07787	
A08		PR00000035	PRESSURE ROLLER	1			Y07787	
A09		PR00000036	WELDING RODS (ABS)	1			Y07787	
A10		PR00000037	WELDING RODS (HDPE)	1			Y07787	
A11		PR00000038	WELDING RODS (PP)	1			Y07787	
A12		PR00000039	SPEED WELDING NOZZLE	1			Y07787	
A13		PR00000040	SCRAPER	1			Y07787	
A14		PR00000041	SCRAPER SET	1			Y07787	
A15		PR00000042	SCRAPER	1			Y07787	
A16		PR00000060	PLASTIC CASE	1		Y07918		
	C10	PR00000127	PLASTIC CASE LATCH	2		Y08023		

Interchange
O : Yes
X : No
< : the new part can be substituted for the current.
> : the current part can be substituted for the new.
S : Interchangeable as a set.