VN	VIETNAM

Diagram / Parts List

GD0601

DIE GRINDER

2021/07

(VN) GD0601 / DIE GRINDER

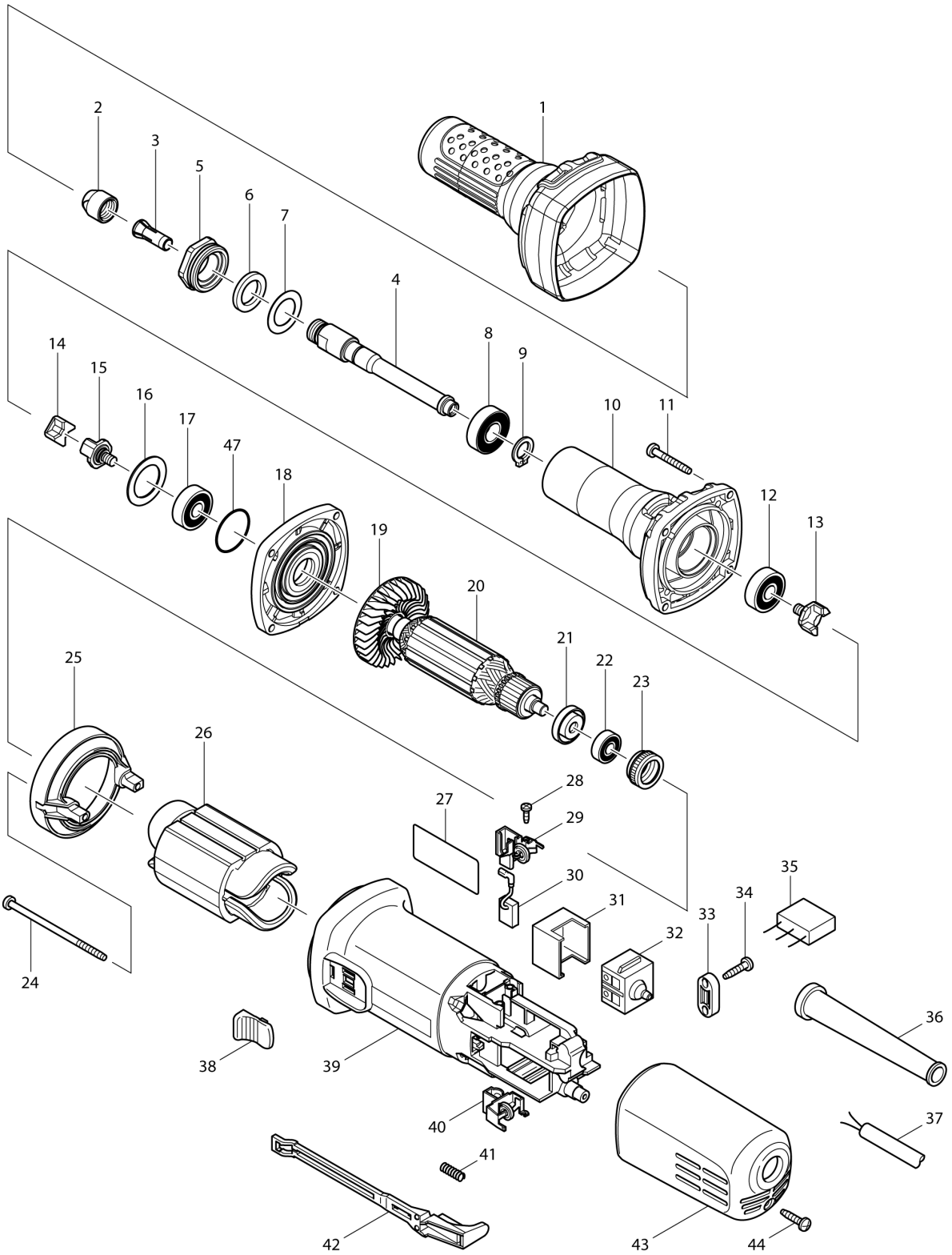

VN	VIETNAM

GD0601 / DIE GRINDER

Item	Sub	Parts No.	Parts Description	Qty	I/C	E/C No.	Close No.	Remark
001		421943-7	INSULATION COVER	1				
002		763664-8	COLLET NUT 6	1				
003		763620-8	COLLET CONE 6MM	1			D8830	
003-1		763620-8	COLLET CONE 6MM	1	O	D8830		
004		324638-0	SPINDLE	1				
005		317999-5	BEARING RETAINER	1				
006		443124-3	FELT RING 17	1				
007		267329-9	FLAT WASHER 18	1				
008		210106-8	BALL BEARING 6001LLB	1				
009		961052-5	RETAINING RING S-12	1				
010		318000-9	BARREL	1				
011		266361-0	TAPPING SCREW 4X30	4				
012		210042-8	BALL BEARING 629LLB	1				
013		324639-8	COUPLING	1				
014		421942-9	SPACER	1				
015		324639-8	COUPLING	1				
016		267126-3	FLAT WASHER 22	1				
017		210042-8	BALL BEARING 629LLB	1				
018		317821-6	GEAR HOUSING COVER	1				
019		240076-7	FAN 56	1				
020		515678-1	ARMATURE ASS'Y 220V	1				
	D10		INC. 19,21,22					
021		681636-0	INSULATION WASHER	1				
022		210034-7	BALL BEARING 607LLB	1				
023		421868-5	LABYRINTH RUBBER RING 19	1				
024		266345-8	TAPPING SCREW 4X80	2				
025		418770-1	BAFFLE PLATE	1			B9212	
025-1		457791-8	BAFFLE PLATE	1	<	B9212		
026		621723-3	FIELD 220-240V	1				
027		863144-5	GD0601 NAME PLATE	1				
028		266007-8	TAPPING SCREW BIND PT 3X10	4				
029		643760-7	BRUSH HOLDER	1				
030		194074-2	CARBON BRUSH CB-325	1			85070	
030-1		195001-2	CARBON BRUSH SET CB-325	1	<	85070		
031		418729-8	SPACER	1				
032		650560-8	SWITCH DPX-2110-R	1			93182	
032-1		651947-7	SWITCH 1247.0302	1	O	93182		
033		687140-7	STRAIN RELIEF	1				
034		266326-2	TAPPING SCREW 4X18	2				
036		682566-8	CORD GUARD 10	1				
037		691015-4	POWER SUPPLY CORD 0.75-2-2.5	1				
038		419566-3	SWITCH KNOB	1				
039-1		418725-6	MOTOR HOUSING	1				
040		643760-7	BRUSH HOLDER	1				
041		233121-5	COMPRESSION SPRING 4	1				
042		418728-0	SWITCH LEVER B	1				
043		418726-4	REAR COVER	1			DB072	
043-1		413A32-8	REAR COVER	1	<	DB072		
044		266326-2	TAPPING SCREW 4X18	1				
047		213445-5	O-RING 26	1				
A01		781039-9	WRENCH 13	2				

Interchange
O : Yes
X : No
< : the new part can be substituted for the current.
> : the current part can be substituted for the new.
S : Interchangeable as a set.