VN	VIETNAM

Diagram / Parts List

DTS141

CORDLESS OIL-PULSE DRIVER

2021/07

(VN) DTS141 / CORDLESS OIL-PULSE DRIVER

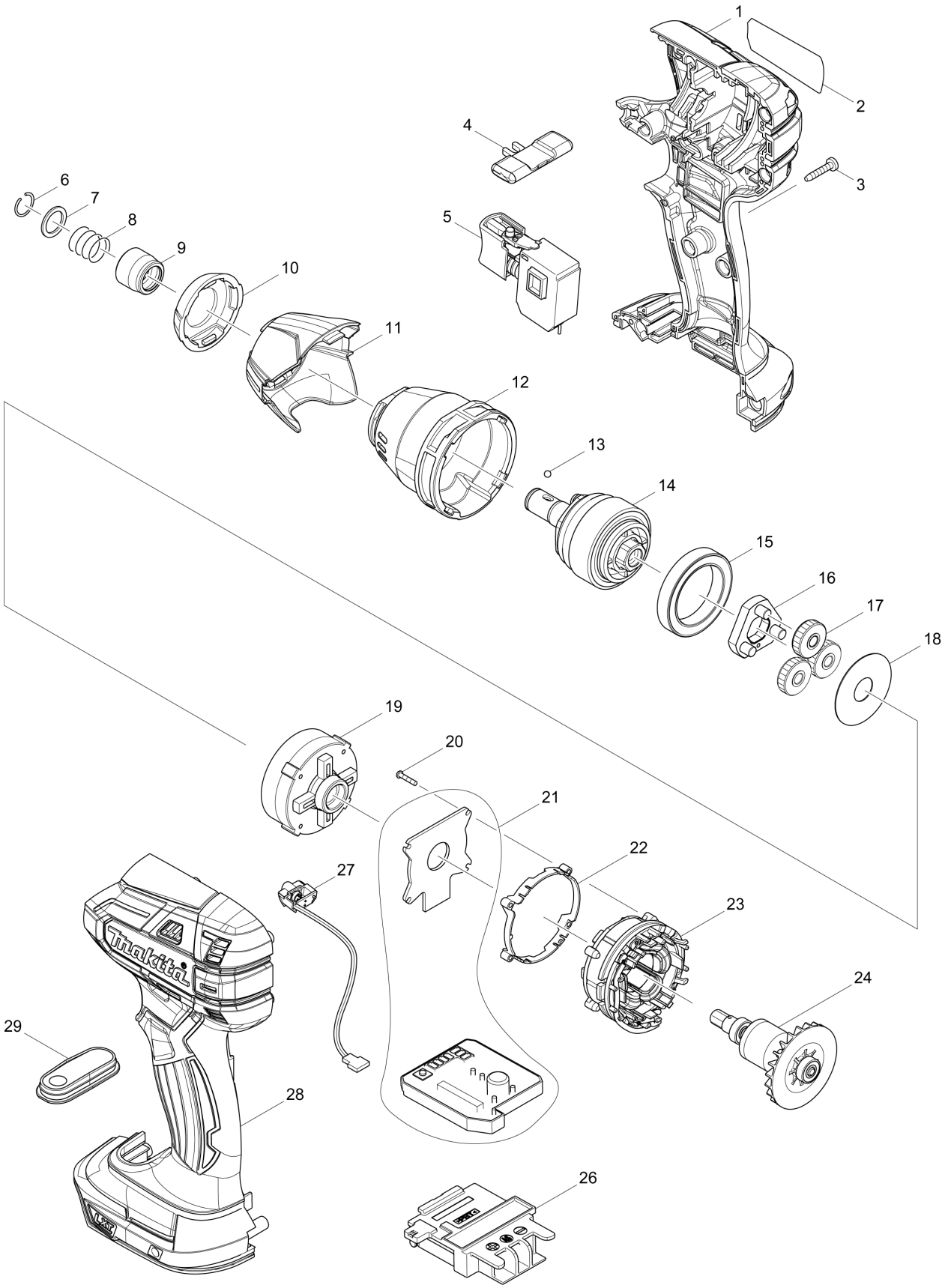

VN	VIETNAM

DTS141 / CORDLESS OIL-PULSE DRIVER

Item	Sub	Parts No.	Parts Description	Qty	I/C	E/C No.	Close No.	Remark
001		187989-0	HOUSING SET	1				
	C10	263005-3	RUBBER PIN 6	2				
	C20	252126-6	HEX. LOCK NUT M4-7	2				
	D10		INC. 28					
002		850H88-6	DTS141 NAME PLATE	1				
003		266130-9	TAPPING SCREW BIND PT 3X16	9				
004		455053-8	F/R CHANGE LEVER	1				
005		650673-5	SWITCH C3JW-1A	1				
006		231965-7	RING SPRING 10	1				
007		267143-3	FLAT WASHER 11	1				
008		234347-2	COMPRESSION SPRING 11	1				
009-1		326542-9	BIT SLEEVE	1				
010		424662-4	BUMPER	1				
011		455468-9	UNIT CASE COVER	1				
012		142928-7	UNIT CASE COMPLETE	1				
	C10	213126-1	OIL SEAL 12	1				
	C20	211136-2	BALL BEARING 6801LLB	1				
013		216019-1	STEEL BALL 3	2				
014-2		143274-1	OIL UNIT COMPLETE	1				
	C10	143263-6	BIT PIECE A COMPLETE	1				
015		211294-4	BALL BEARING 6806LLU	1				
016		142929-5	CARRIER COMPLETE	1				
017		227368-1	SPUR GEAR 22	3				
018		267067-3	FLAT WASHER 12	1				
019		227361-5	INTERNAL GEAR 51	1				
020		266786-8	+ PAN HEAD TAPPING SCREW 2X10	4				
021		620354-5	CONTROLLER	1			C0482	
021-1		620895-1	CONTROLLER	1	<	C0482		
022		687464-1	SUPPORT	1				
023		629137-0	STATOR	1				
024		619358-2	ROTOR	1				
026		643860-3	TERMINAL	1				
027		620355-3	LED CIRCUIT	1				
028		187989-0	HOUSING SET	1				
	C10	263005-3	RUBBER PIN 6	2				
	C20	252126-6	HEX. LOCK NUT M4-7	2				
	D10		INC. 1					
029-1		141583-2	SWITCH PLATE COMPLETE	1				
A01		266622-8	+ TRUSS HEAD SCREW M4X12	1				
A02		346317-0	HOOK	1				
A03B		***DC18RC	DC18RC FAST CHARGER	1				
A04B		197265-4	BATTERY BL1840B SET	2			C5218	
A04-1B		197265-4	BATTERY BL1840B SET	2	O	C5218		
A05B		450128-8	BATTERY COVER	1				
A06B		824979-9	PLASTIC CARRYING CASE	1				
	C10	162302-3	LATCH	2				
	C20	324319-6	SHAFT	1				
	C30	451749-9	HANDLE	1				

B:DTS141RME(H)

Interchange
O : Yes
X : No
< : the new part can be substituted for the current.
> : the current part can be substituted for the new.
S : Interchangeable as a set.