VN	VIETNAM

Diagram / Parts List

DTL063

CORDLESS ANGLE IMPACT WRENCH

2021/01

(VN) DTL063 / CORDLESS ANGLE IMPACT WRENCH

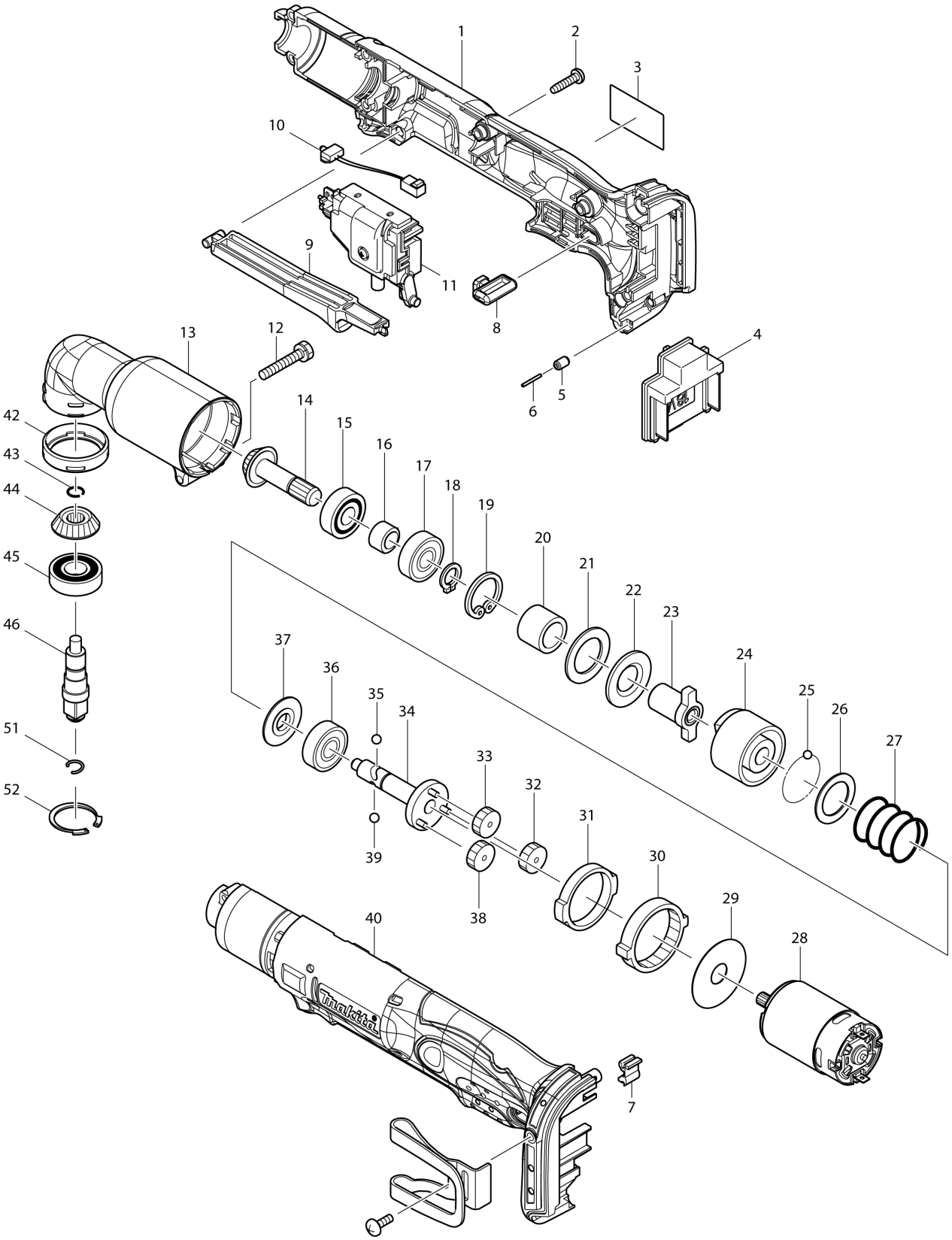

VN	VIETNAM

DTL063 / CORDLESS ANGLE IMPACT WRENCH

Item	Sub	Parts No.	Parts Description	Qty	I/C	E/C No.	Close No.	Remark
001		188397-8	HOUSING SET	1				
	C10	263005-3	RUBBER PIN 6	2				
	D10		INC. 40					
002		265995-6	TAPPING SCREW 4X18	8				
003		815L75-6	DTL063 NAME PLATE	1				
004		643852-2	TERMINAL	1				
005		263036-2	RUBBER PIN 5	1				
006		268184-2	PIN 1.5	1				
007		424026-2	CUSHION	1				
008		450126-2	FR CHANGE LEVER	1				
009		450125-4	SWITCH LEVER	1				
010		631778-0	LED CIRCUIT	1				
011		638885-0	SWITCH UNIT	1				
012		265409-5	+ HEX. BOLT M5X30	1				
013		152461-1	ANGLE HEAD COMPLETE	1				
014		226720-0	ZEROL BEVEL GEAR 13	1				
015		211064-1	BALL BEARING 6000	1				
016		257660-1	SLEEVE 10	1				
017		211061-7	BALL BEARING 6000LLB	1				
018		961006-2	RETAINING RING S-10	1				
019		962105-3	RETAINING RING R-26	1				
020		257662-7	SLEEVE 15	1				
021		261095-0	RUBBER WASHER 21	1				
022		267120-5	FLAT WASHER 15	1				
023		322689-7	ANVIL	1				
024		322688-9	HAMMER	1				
025		216001-0	STEEL BALL 3.5	22				
026		267121-3	FLAT WASHER 20	1				
027		233107-9	COMPRESSION SPRING 22	1				
028		629846-1	DC MOTOR	1				
029		267053-4	FLAT WASHER 12	1				
030		226280-2	INTERNAL GEAR 69	1				
031		257187-1	RING 32	1				
032		226279-7	SPUR GEAR 29	1				
033		226279-7	SPUR GEAR 29	1				
034		154416-2	SPINDLE COMPLETE	1				
035		216002-8	STEEL BALL 4.8	1				
036		211064-1	BALL BEARING 6000	1				
037		322719-4	WASHER 10	1				
038		226279-7	SPUR GEAR 29	1				
039		216002-8	STEEL BALL 4.8	1				
040		188397-8	HOUSING SET	1				
	C10	263005-3	RUBBER PIN 6	2				
	D10		INC. 1					
042		424044-0	RUBBER RING 32	1				
043		231990-8	RING SPRING 9	1				
044		226721-8	ZEROL BEVEL GEAR 13	1				
045		211131-2	BALL BEARING 6001DDW	1				
046		324026-1	SPINDLE	1				
051		231964-9	RING SPRING 7	1				
052		962116-8	RETAINING RING R-28	1				
A01		346317-0	HOOK	1				
A02		251314-2	+ SCREW M4X12	1				

Interchange
O : Yes
X : No
< : the new part can be substituted for the current.
> : the current part can be substituted for the new.
S : Interchangeable as a set.