VN	VIETNAM

Diagram / Parts List

BGD800

CORDLESS DIE GRINDER

2021/01

(VN) BGD800 / CORDLESS DIE GRINDER

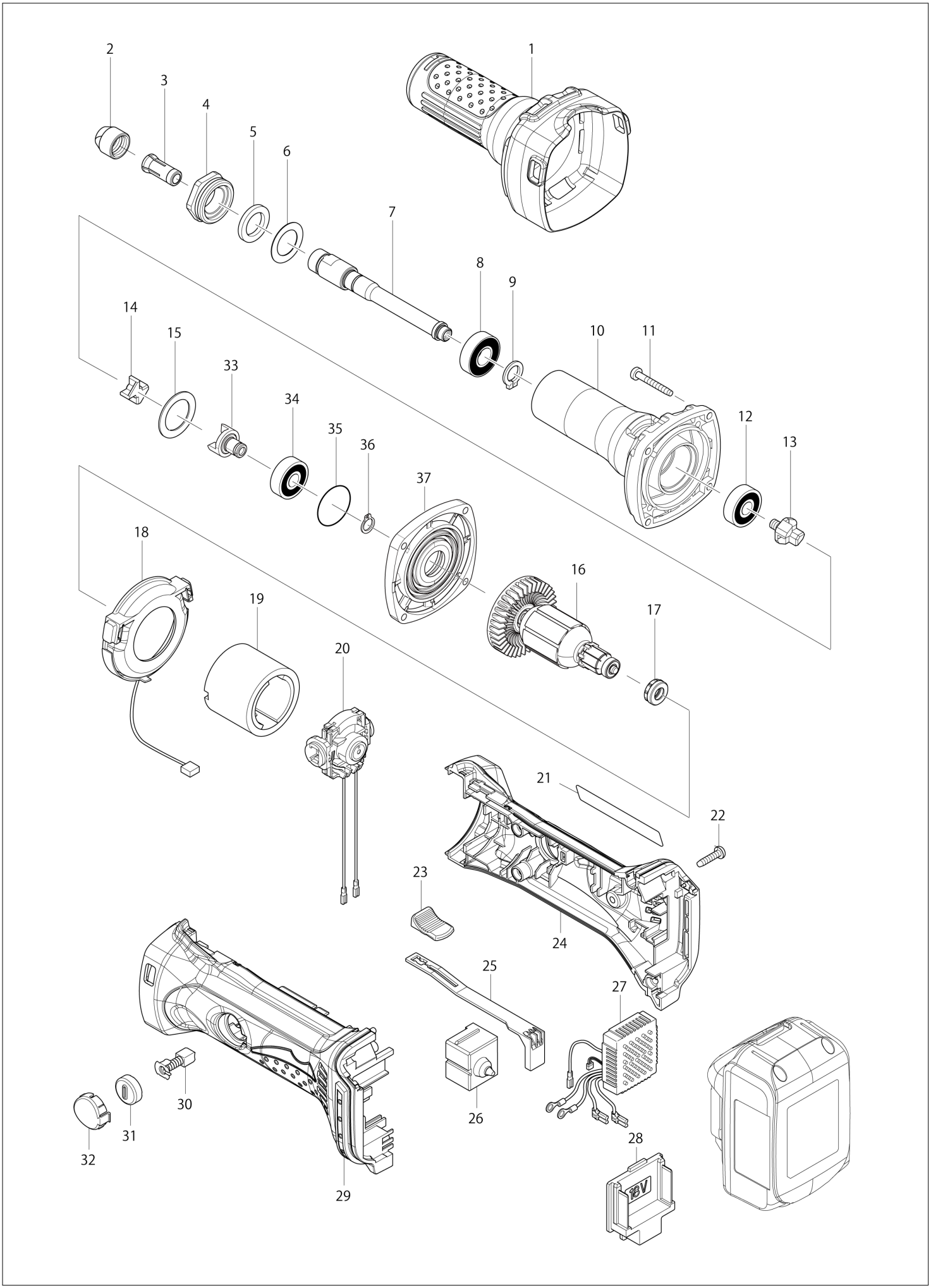

VN	VIETNAM

BGD800 / CORDLESS DIE GRINDER

Item	Sub	Parts No.	Parts Description	Qty	I/C	E/C No.	Close No.	Remark
001		424380-4	INSULATION COVER	1				
002		763668-0	COLLET NUT	1				
003		763670-3	COLLET CONE 6	1				
004		317999-5	BEARING RETAINER	1				
005		443124-3	FELT RING 17	1				
006		267329-9	FLAT WASHER 18	1				
007		326010-2	SPINDLE	1				
008		210106-8	BALL BEARING 6001LLB	1				
009		961052-5	RETAINING RING S-12	1				
010		318000-9	BARREL	1				
011		266361-0	TAPPING SCREW 4X30	4				
012		210042-8	BALL BEARING 629LLB	1				
013		324639-8	COUPLING	1				
014		421942-9	SPACER	1				
015		267126-3	FLAT WASHER 22	1				
016		619284-5	ARMATURE	1				
	D10		INC. 17					
017		421977-0	RUBBER RING 13	1				
018		631714-6	LED CIRCUIT	1				
019		638627-2	YOKE UNIT	1				
020		638448-2	ENDBELL COMPLETE	1				
021		868960-0	BGD800 NAME PLATE	1				
022		266326-2	TAPPING SCREW 4X18	5				
023		419566-3	SWITCH KNOB	1				
024		188704-5	HOUSING SET	1			A0871	
	D10		INC. 29				A0871	
024-1		187839-9	HOUSING SET	1	X	A0871		
	C10	263005-3	RUBBER PIN 6	2		A0871		
	D10		INC. 29			A0871		
025		419519-2	SWITCH LEVER	1				
026		650579-7	SWITCH 1246.3223	1				
027		631713-8	CONTROLLER	1			91533	
027-1		620072-5	CONTROLLER	1	O	91533	A0871	
027-2		620243-4	CONTROLLER	1	X	A0871		
028		643838-6	TERMINAL	1			A0871	
028-1		644808-8	TERMINAL	1	X	A0871		
029		188704-5	HOUSING SET	1			A0871	
	D10		INC. 24				A0871	
029-1		187839-9	HOUSING SET	1	X	A0871		
	C10	263005-3	RUBBER PIN 6	2		A0871		
	D10		INC. 24			A0871		
030		195018-5	CARBON BRUSH SET CB-430	1				
031		643929-3	BRUSH HOLDER CAP	2				
032		419518-4	HOLDER CAP COVER	2				
033		326009-7	COUPLING	1				
034		210042-8	BALL BEARING 629LLB	1				
035		213445-5	O-RING 26	1				
036		961005-4	RETAINING RING S-9	1				
037		317821-6	GEAR HOUSING COVER	1				
A01		781039-9	WRENCH 13	2				

Interchange
O : Yes
X : No
< : the new part can be substituted for the current.
> : the current part can be substituted for the new.
S : Interchangeable as a set.