VN	VIETNAM

Diagram / Parts List

DF002G

CORDLESS DRIVER DRILL

2021/08

(VN) DF002G / CORDLESS DRIVER DRILL

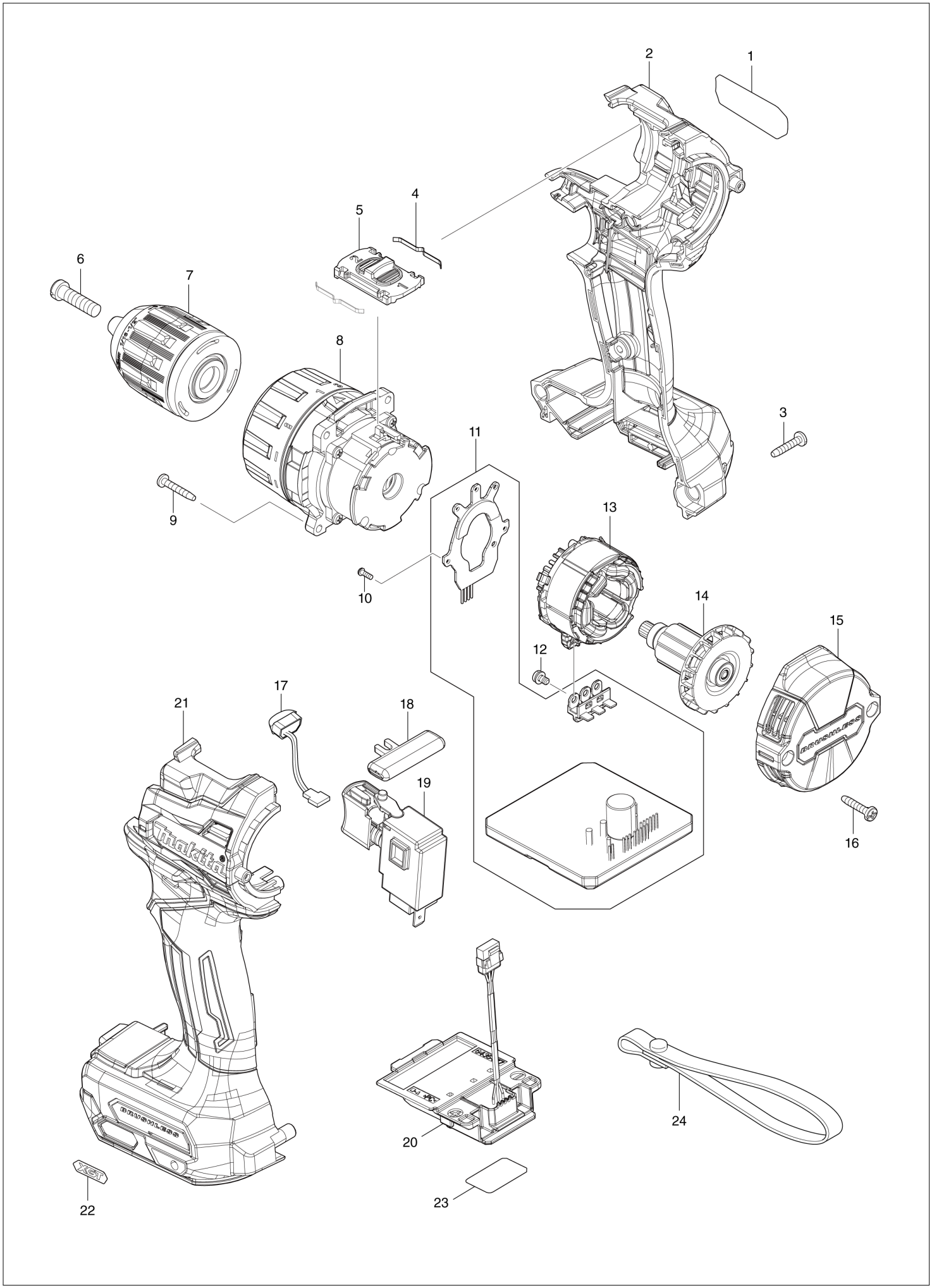

VN	VIETNAM

DF002G / CORDLESS DRIVER DRILL

Item	Sub	Parts No.	Parts Description	Qty	I/C	E/C No.	Close No.	Remark
001		858D03-0	DF002G NAME PLATE	1				
002		183S03-4	HOUSING SET	1				
	C10	263005-3	RUBBER PIN 6	2				
	C20	252126-6	HEX. LOCK NUT M4-7	2				
	D10		INC. 21					
003		266429-2	TAPPING SCREW 3X16	7				
004		232493-5	LEAF SPRING	2				
005		127731-7	SPEED CHANGE LEVER ASSEMBLY	1				
	C10	233438-6	COMPRESSION SPRING 4	2				
006		251468-5	- FLAT HEAD SCREW M6X22	1				
007		763256-3	KEYLESS DRILL CHUCK 13	1				
008		127730-9	GEAR ASSEMBLY	1				
009		251497-8	TAPPING SCREW 3X20	4				
010		266490-9	TAPPING SCREW PT 2X6	3				
011		620E42-4	CONTROLLER	1				
012		652069-6	FLAT HEAD SCREW M3X6	3				
013		629A35-4	STATOR	1				
014		619659-8	ROTOR	1				
015		413251-0	REAR COVER	1				
016		266429-2	TAPPING SCREW 3X16	2				
017		620549-0	LED CIRCUIT	1				
018		419041-9	F/R CHANGE LEVER	1				
019		651443-5	SWITCH C3JR-4B	1				
020		632R99-1	TERMINAL UNIT	1				
021		183S03-4	HOUSING SET	1				
	C10	263005-3	RUBBER PIN 6	2				
	C20	252126-6	HEX. LOCK NUT M4-7	2				
	D10		INC. 2					
022		8007R2-2	XGT LOGO LABEL	1				
023		858D10-3	DF002G SERIAL NO. LABEL	1				
024		163400-6	HANDSTRAP	1				
A01		251314-2	+ SCREW M4X12	1				
A02		346317-0	HOOK	1				
A03		784637-8	+- BIT 2-45	1				
A04B		***DC40RA	DC40RA FAST CHARGER	1				
	D10		COMPO-PARTS					
A04C		***DC40RC	DC40RC FAST CHARGER	1				
	D10		COMPO-PARTS					
A05B		191B36-3	BATTERY BL4025 SET	2				
A05C		191L29-0	BATTERY BL4020 SET	2				
A06B		412393-7	BATTERY COVER	1				
A06C		412393-7	BATTERY COVER	1				
A07B		821550-0	CONNECTOR PLASTIC CASE (TYPE2)	1				
	C10	453974-8	LATCH	4				
A07C		821550-0	CONNECTOR PLASTIC CASE (TYPE2)	1				
	C10	453974-8	LATCH	4				
A08B		835U77-0	INNER TRAY	1				
A08C		835U77-0	INNER TRAY	1				
A09B		8028H4-0	DF002GD201 INDICATION LABEL	1				
A09C		8028L0-6	DF002GA201 INDICATION LABEL	1				
A10B		8028H5-8	DF002GD201 PLASTIC CASE LABEL	2				
A10C		8028L1-4	DF002GA201 PLASTIC CASE LABEL	2				

B:DF002GD201(H)
C:DF002GA201(H)

Interchange
O : Yes
X : No
< : the new part can be substituted for the current.
> : the current part can be substituted for the new.
S : Interchangeable as a set.