VN	VIETNAM

Diagram / Parts List

DDF481

CORDLESS DRIVER DRILL

2021/05

(VN) DDF481 / CORDLESS DRIVER DRILL

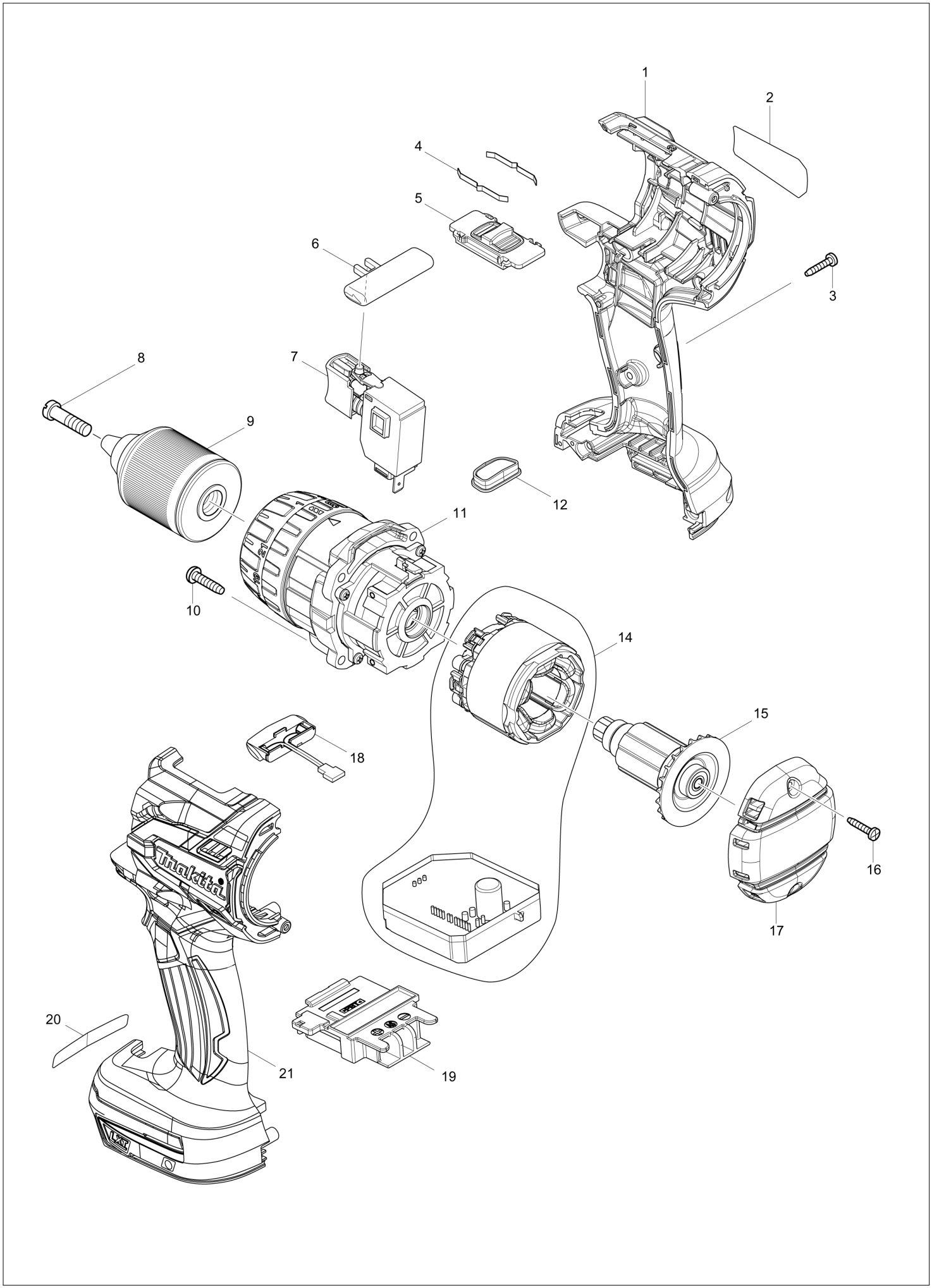

VN	VIETNAM

DDF481 / CORDLESS DRIVER DRILL

Item	Sub	Parts No.	Parts Description	Qty	I/C	E/C No.	Close No.	Remark
001		187921-4	HOUSING SET	1				
	C10	263005-3	RUBBER PIN 6	2				
	D10		INC. 21					
002		815S56-2	DDF481 NAME PLATE	1				
003		266130-9	TAPPING SCREW BIND PT 3X16	7				
004		232220-0	LEAF SPRING	2				
005		126411-2	SPEED CHANGE LEVER ASSEMBLY	1				
	C10	233438-6	COMPRESSION SPRING 4	2				
006		419250-0	F/R CHANGE LEVER	1				
007		650710-5	SWITCH C3JW-4B	1			D9871	
007-1		650006-4	SWITCH TGRK2-1	1	O	D9871		
008		251468-5	- FLAT HEAD SCREW M6X22	1				
009-1		763248-2	KEYLESS DRILL CHUCK 13	1			DA353	
009-2		763252-1	KEYLESS DRILL CHUCK 13	1	O	DA353		
010		265995-6	TAPPING SCREW 4X18	4			B9466	
010-1		266326-2	TAPPING SCREW 4X18	4	O	B9466		
011		126409-9	GEAR ASSEMBLY	1				
012		142263-3	INDICATOR PANEL COMPLETE	1				
014		629116-8	STATOR COMPLETE	1				
015-1		619397-2	ROTOR	1				
016		266130-9	TAPPING SCREW BIND PT 3X16	2				
017		455011-4	REAR COVER	1				
018		620283-2	LED CIRCUIT	1				
019		643899-6	TERMINAL	1				
021		187921-4	HOUSING SET	1				
	C10	263005-3	RUBBER PIN 6	2				
	D10		INC. 1					
A01		126412-0	GRIP ASSEMBLY	1				
	C10	142652-2	POLE COMPLETE	1			D1763	
	C11	140R59-4	POLE COMPLETE	1	<	D1763		
	C20	142653-0	ARM R COMPLETE	1				
	C30	266886-4	HEX. BOLT M8X65	1				
	C40	319129-4	ARM L	1				
	C50	962055-2	RETAINING RING (INT) R-15	1				
A02		251314-2	+ SCREW M4X12	2				
A03		346317-0	HOOK	1				
A04		452947-8	BIT HOLDER	1				
A05		784637-8	+- BIT 2-45	2				

Interchange
O : Yes
X : No
< : the new part can be substituted for the current.
> : the current part can be substituted for the new.
S : Interchangeable as a set.