VN	VIETNAM

Diagram / Parts List

DDF343

CORDLESS DRIVER DRILL 10MM

2021/01

(VN) DDF343 / CORDLESS DRIVER DRILL 10MM

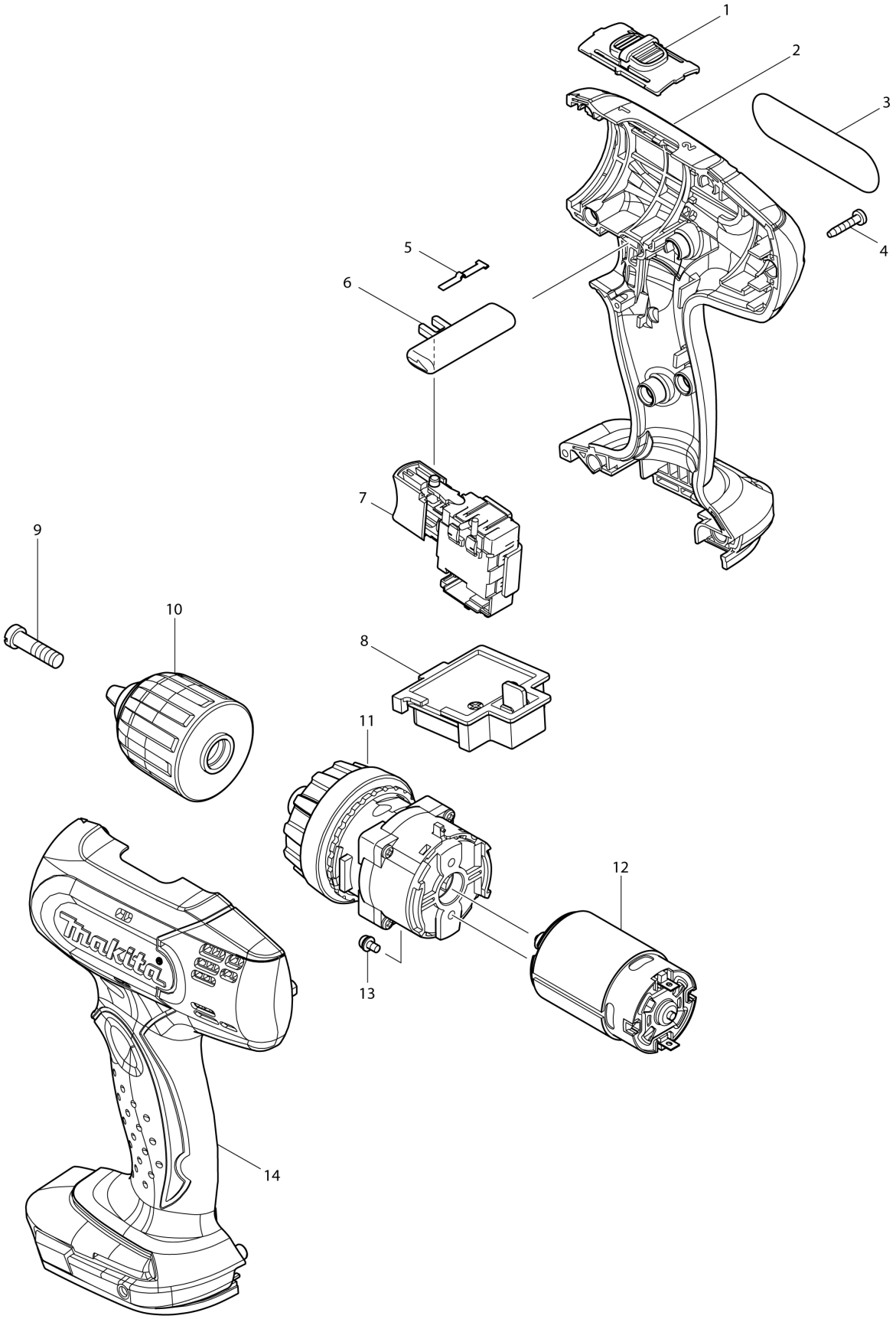

VN	VIETNAM

DDF343 / CORDLESS DRIVER DRILL 10MM

Item	Sub	Parts No.	Parts Description	Qty	I/C	E/C No.	Close No.	Remark
001		125310-5	SPEED CHANGE LEVER ASS'Y	1				
	C10	231433-0	COMPRESSION SPRING 4	2				
002		187722-0	HOUSING SET	1				
	D10		INC. 14					
003		815H09-5	DDF343 NAME PLATE	1				
004		266130-9	TAPPING SCREW BIND PT 3X16	9				
005		232182-2	LEAF SPRING	1				
006		419250-0	F/R CHANGE LEVER	1				
007		632A24-0	SWITCH UNIT	1				
008		643854-8	TERMINAL	1				
009		251468-5	- FLAT HEAD SCREW M6X22	1				
010		766002-3	KEYLESS DRILL CHUCK 10	1			B8219	
010-1		763243-2	KEYLESS DRILL CHUCK 10	1	<	B8219		
011		126000-3	GEAR ASSEMBLY	1				
012		629898-2	DC MOTOR	1				
013		911003-8	PAN HEAD SCREW M3X6	2				
014		187722-0	HOUSING SET	1				
	D10		INC. 2					
A01		784636-0	+- BIT 2-65	1				
A02A		***DC18SD	DC18SD BATTERY CHARGER	1				
A02B		***DC18RC	DC18RC FAST CHARGER	1				
A02D		***DC18SD	DC18SD BATTERY CHARGER	1				
A03A		194558-0	BATTERY BL1415 SET	2				
A03B		194065-3	BATTERY BL1430 SET	2			A5785	
A03D		196875-4	BATTERY BL1415N SET	2			C9209	
A03-1B		194065-3	BATTERY BL1430 SET	2	O	A5785	B2743	
A03-1D		196875-4	BATTERY BL1415N SET	2	O	C9209		
A03-2B		197616-1	BATTERY BL1430B SET	2	<	B2743	C6747	
A03-3B		197616-1	BATTERY BL1430B SET	2	O	C6747		
A04A		450128-8	BATTERY COVER	1				
A04B		450128-8	BATTERY COVER	1				
A04D		450128-8	BATTERY COVER	1				
A05A		158777-2	PLASTIC CARRYING CASE	1				
	C10	163455-1	LATCH	2				
	C20	419360-3	HANDLE	1				
A05B		158777-2	PLASTIC CARRYING CASE	1				
	C10	163455-1	LATCH	2				
	C20	419360-3	HANDLE	1				
A05D		158777-2	PLASTIC CARRYING CASE	1				
	C10	163455-1	LATCH	2				
	C20	419360-3	HANDLE	1				

A:DDF343SHE(H)
B:DDF343RFE(H)
D:DDF343SYE(H)

Interchange
O : Yes
X : No
< : the new part can be substituted for the current.
> : the current part can be substituted for the new.
S : Interchangeable as a set.