VN	VIETNAM

Diagram / Parts List

6501

HIGH SPEED DRILL 6.5MM

2021/05

(VN) 6501 / HIGH SPEED DRILL 6.5MM

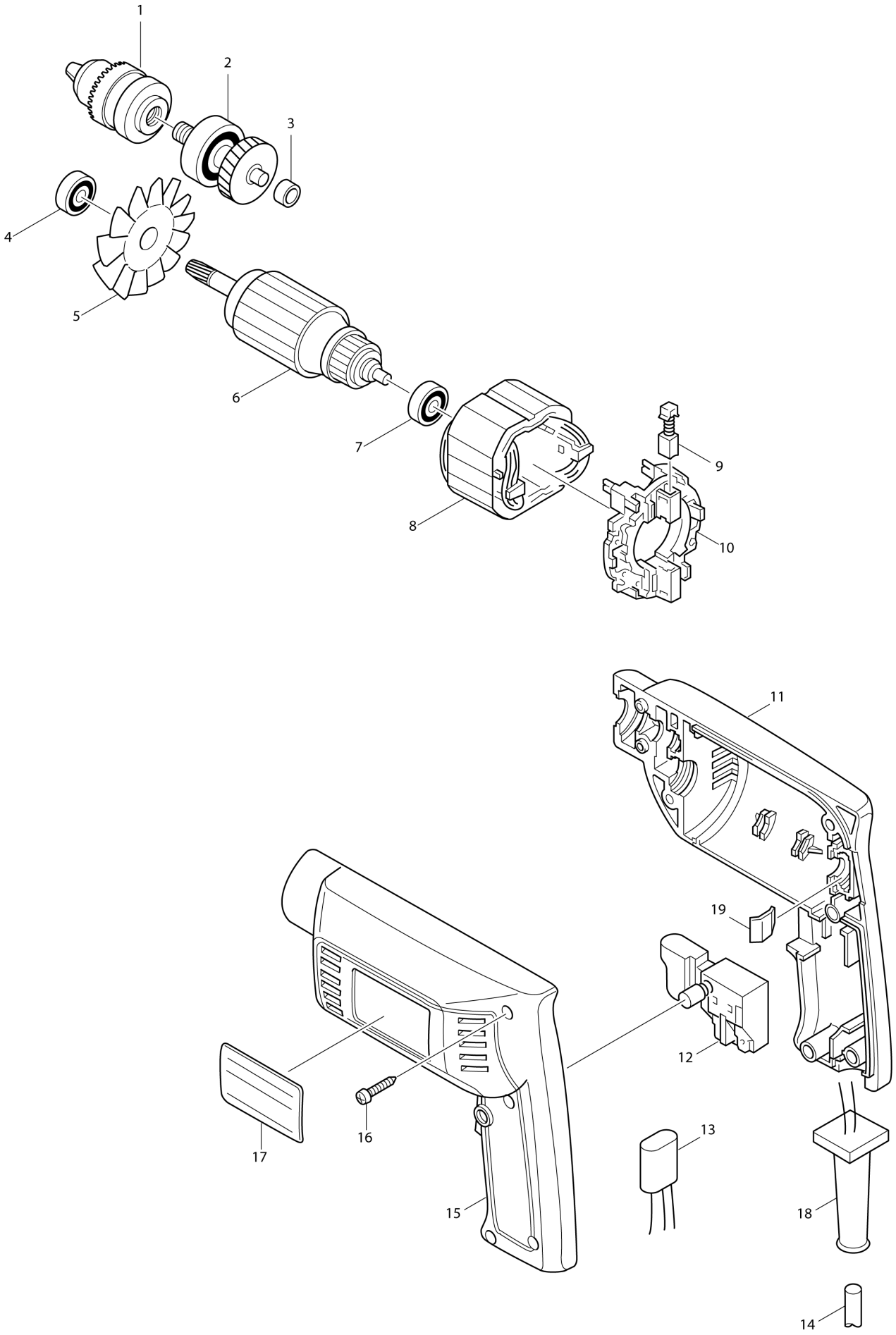

VN	VIETNAM

6501 / HIGH SPEED DRILL 6.5MM

Item	Sub	Parts No.	Parts Description	Qty	I/C	E/C No.	Close No.	Remark
001-1		192887-5	DRILL CHUCK	1				
002		153178-9	GEAR COMPLETE	1				
003		214017-9	PLANE BEARING 5	1				
004		211018-8	BALL BEARING 626LB	1			80770	
004-1		211016-2	BALL BEARING 626LLB	1	O	80770		
005		241508-7	FAN 52	1				
006C1		517033-3	ARMATURE ASS'Y 220V	1				220V
	D10		INC. 4,5,7					
007		211018-8	BALL BEARING 626LB	1			80770	
007-1		211016-2	BALL BEARING 626LLB	1	O	80770		
008C_		633033-6	FIELD 220V	1				220V
009		191914-5	CARBON BRUSH CB-70	1			85070	
009-1		B-80276	CARBON BRUSH SET CB-70A	1	<	85070		
010-1		632073-1	TERMINAL BASE COMPLETE 55C	1				
011-4		183067-4	HOUSING SET	1	O	57194	74679	
	D10		INC. 15				74679	
011-5		183209-0	HOUSING SET	1	S	74679		
	D10		INC. 15			74679		
012		651242-5	SWITCH SGEL106C-1	1			74679	
012-1		650223-6	SWITCH SGEL115CD-4	1	S	74679		
013		645105-5	NOISE SUPPRESSOR	1		A7132		
014N_		691055-2	POWER SUPPLY CORD 0.75-2-2.0	1				
015-4		183067-4	HOUSING SET	1	O	57194	74679	
	D10		INC. 11				74679	
015-5		183209-0	HOUSING SET	1	S	74679		
	D10		INC. 11			74679		
016-1		265874-8	TAPPING SCREW BT 4X20	6				
017		856067-4	NAME PLATE 6501	1				
018		682502-4	CORD GUARD 8-85	1				
019		232100-0	LEAF SPRING	1				
020		265995-6	TAPPING SCREW 4X18	2				
021		687052-4	STRAIN RELIEF	1				
404		763418-3	CHUCK KEY S10	1				
405		411780-7	KEY HOLDER 10	1				

Interchange
O : Yes
X : No
< : the new part can be substituted for the current.
> : the current part can be substituted for the new.
S : Interchangeable as a set.