VN	VIETNAM

Diagram / Parts List

DC18SE

CHARGER

2021/01

(VN) DC18SE / CHARGER

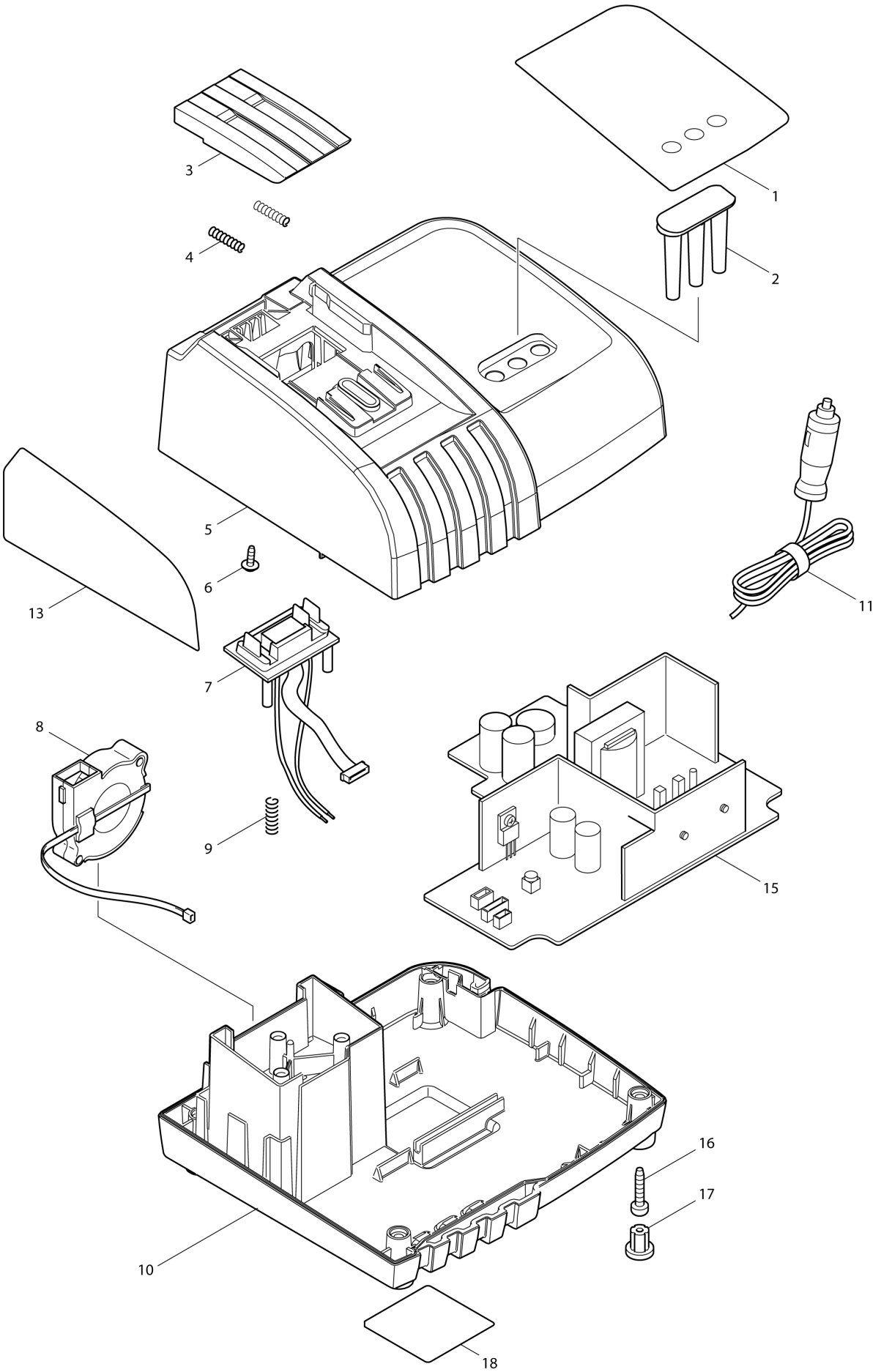

VN	VIETNAM

DC18SE / CHARGER

Item	Sub	Parts No.	Parts Description	Qty	I/C	E/C No.	Close No.	Remark
001		807531-8	CHARGING CONDITION LABEL	1				
002		419570-2	ACRYRIC PIN	1				
003		419569-7	TERMINAL COVER	1			A9611	
003-1		455546-5	TERMINAL COVER	1	<	A9611		
004		231474-6	COMPRESSION SPRING 4	2				
005		158135-2	CHARGER CASE COMPLETE	1			A9611	
	D10		INC. 2				A9611	
005-1		158517-8	CHARGER CASE COMPLETE	1	<	A9611		
	D10		INC. 2			A9611		
006		266278-7	TAPPING SCREW FLANGE BT3X10	1				
007		638602-8	TERMINAL UNIT	1			97786	
007-1		638602-8	TERMINAL UNIT	1	O	97786		
008		638499-5	SCIROCCO FAN	1				
009		233194-8	COMPRESSION SPRING 4	1				
010		419567-1	CHARGER CASE COVER	1				
011		667857-8	POWER SUPPLY CORD	1			A9611	
011-1		667720-5	POWER SUPPLY CORD	1	<	A9611		
015		631826-5	CHARGING CIRCUIT	1				
016		266346-6	TAPPING SCREW BT 4X20	4			D0516	
016-1		265B01-9	TAPPING SCREW PT 4X20	4	<	D0516		
017		286255-3	CAP 13	4				
018		865865-5	DC18SE NAME PLATE	1				

Interchange
O : Yes
X : No
< : the new part can be substituted for the current.
> : the current part can be substituted for the new.
S : Interchangeable as a set.